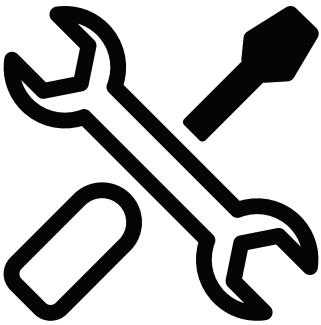

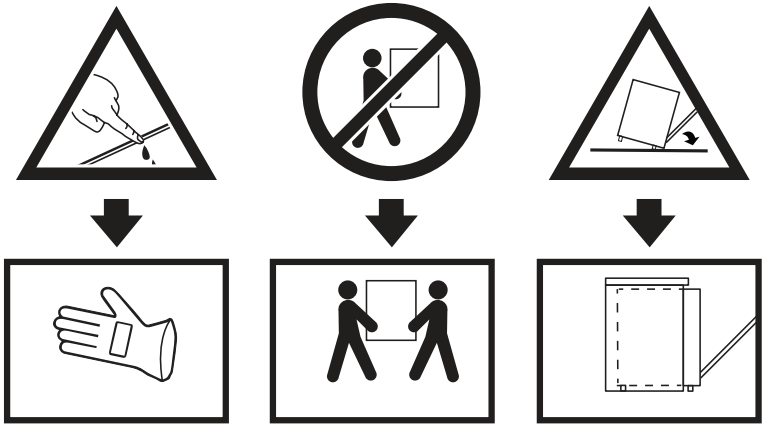

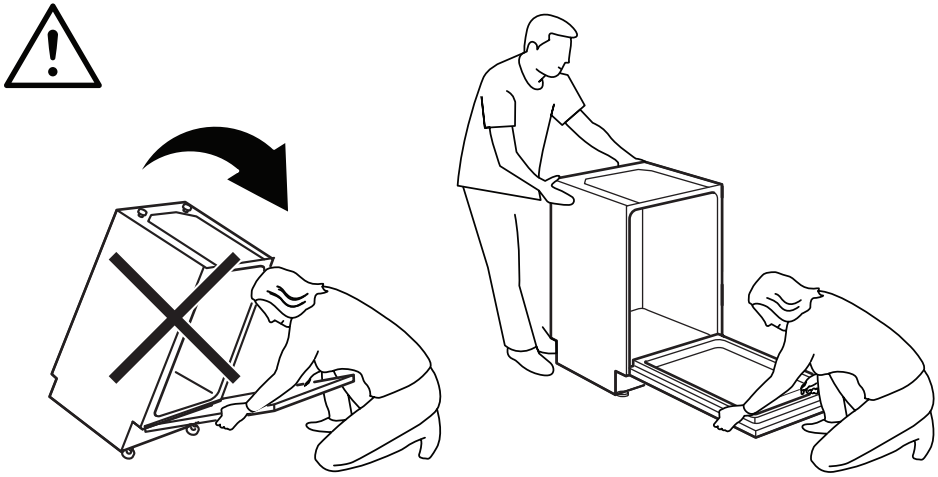

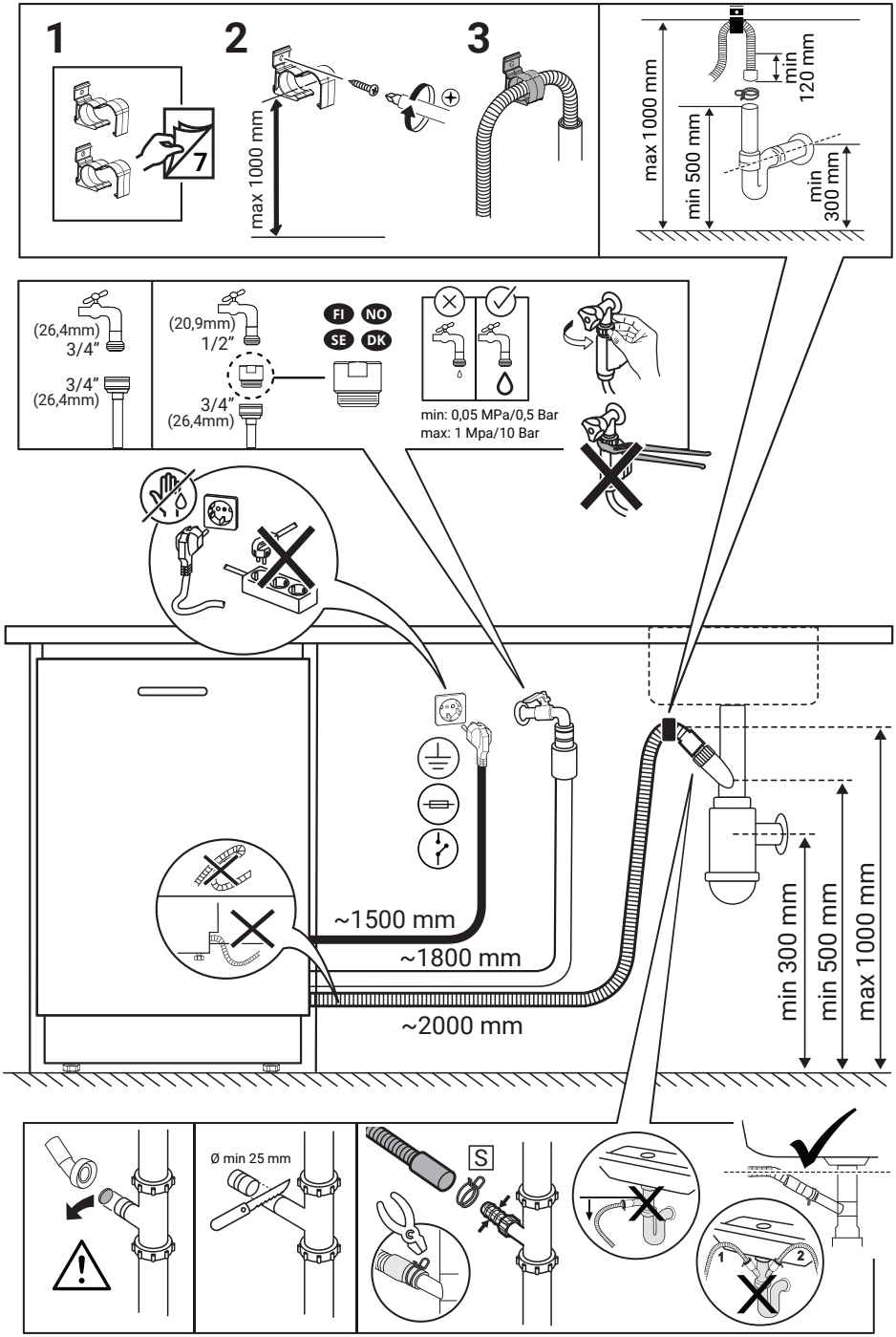
1
2
3
max 1000 mm
min 120 mm
max 1000 mm
min 500 mm
min 300 mm
(26,4mm) 3/4”
3/4” (26,4mm)
(20,9mm) 1/2”
3/4” (26,4mm)
FI NO SE DK
min: 0,05 MPa/0,5 Bar
max: 1 Mpa/10 Bar
~1500 mm
~1800 mm
~2000 mm
min 300 mm
min 500 mm
max 1000 mm
Ø min 25 mm
S

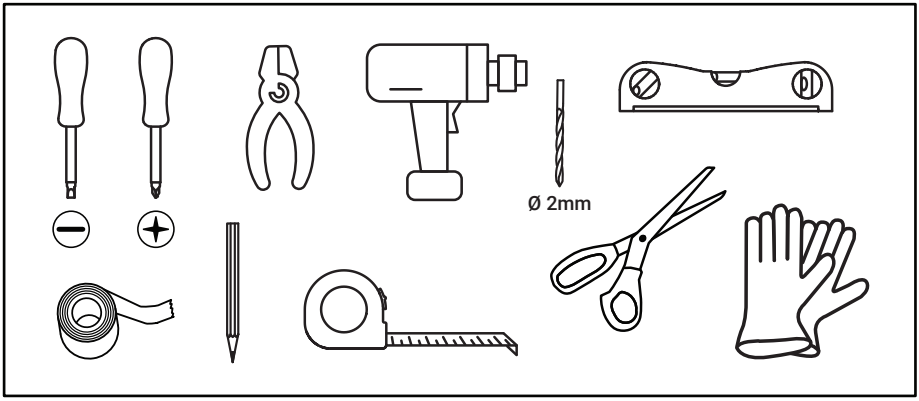

Ø 4 x 13 mm 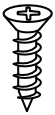 A **4x**	Ø 4 x 25 mm  B **2x**	Ø 4 x 36 mm 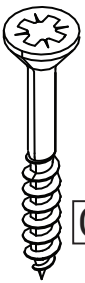 C **4x**	Ø 4 x 42 mm 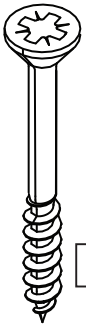 D **2x**	 E **2x**
 H **1x**	 L **1x**	 R **1x**	 S **1x**	 U **2x**
 F **4x**	 N **1x**			

1

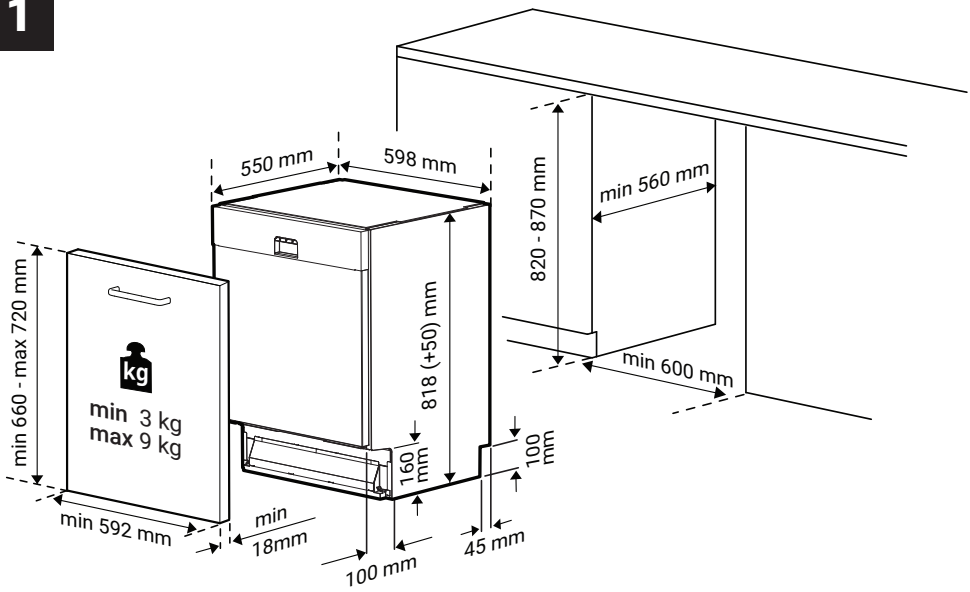
550 mm
598 mm
820 - 870 mm
min 560 mm
min 600 mm
min 660 - max 720 mm
kg
min 3 kg
max 9 kg
818 (+50) mm
160 mm
100 mm
min 592 mm
min 18mm
100 mm
45 mm

2

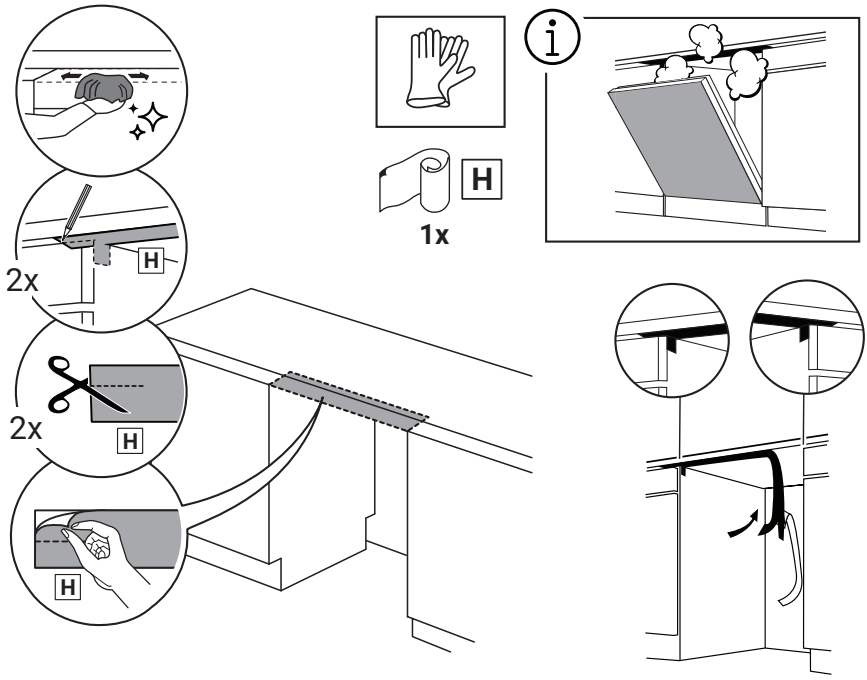
H
1x
2x
2x
H
H
H

3

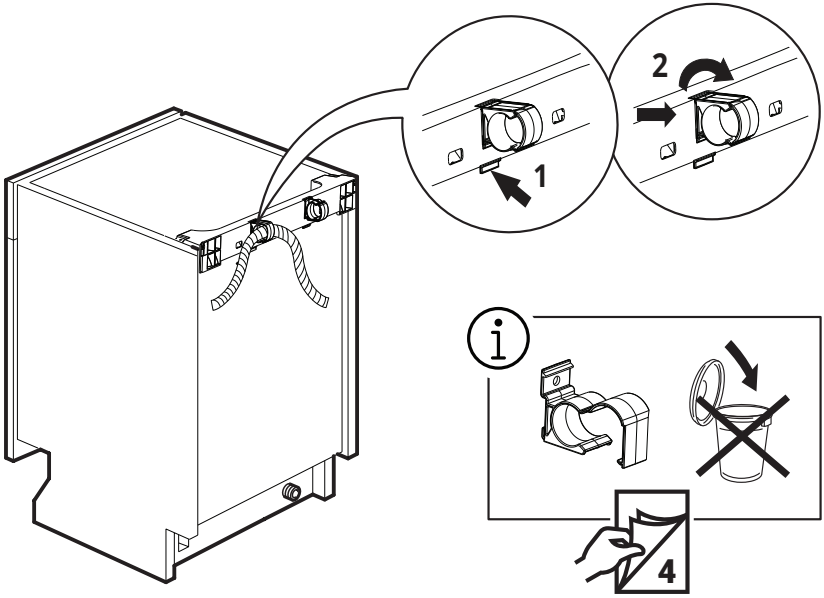

4

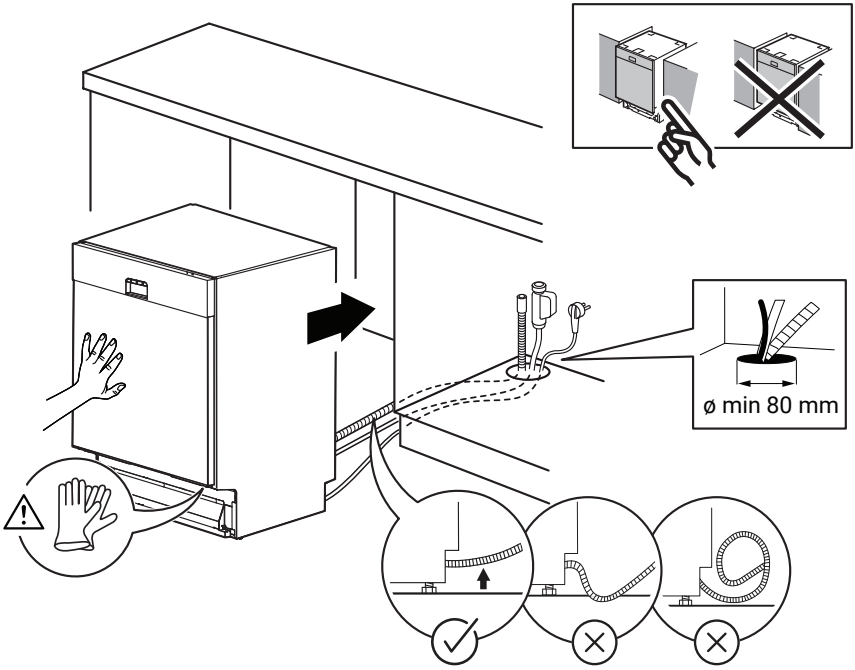

5

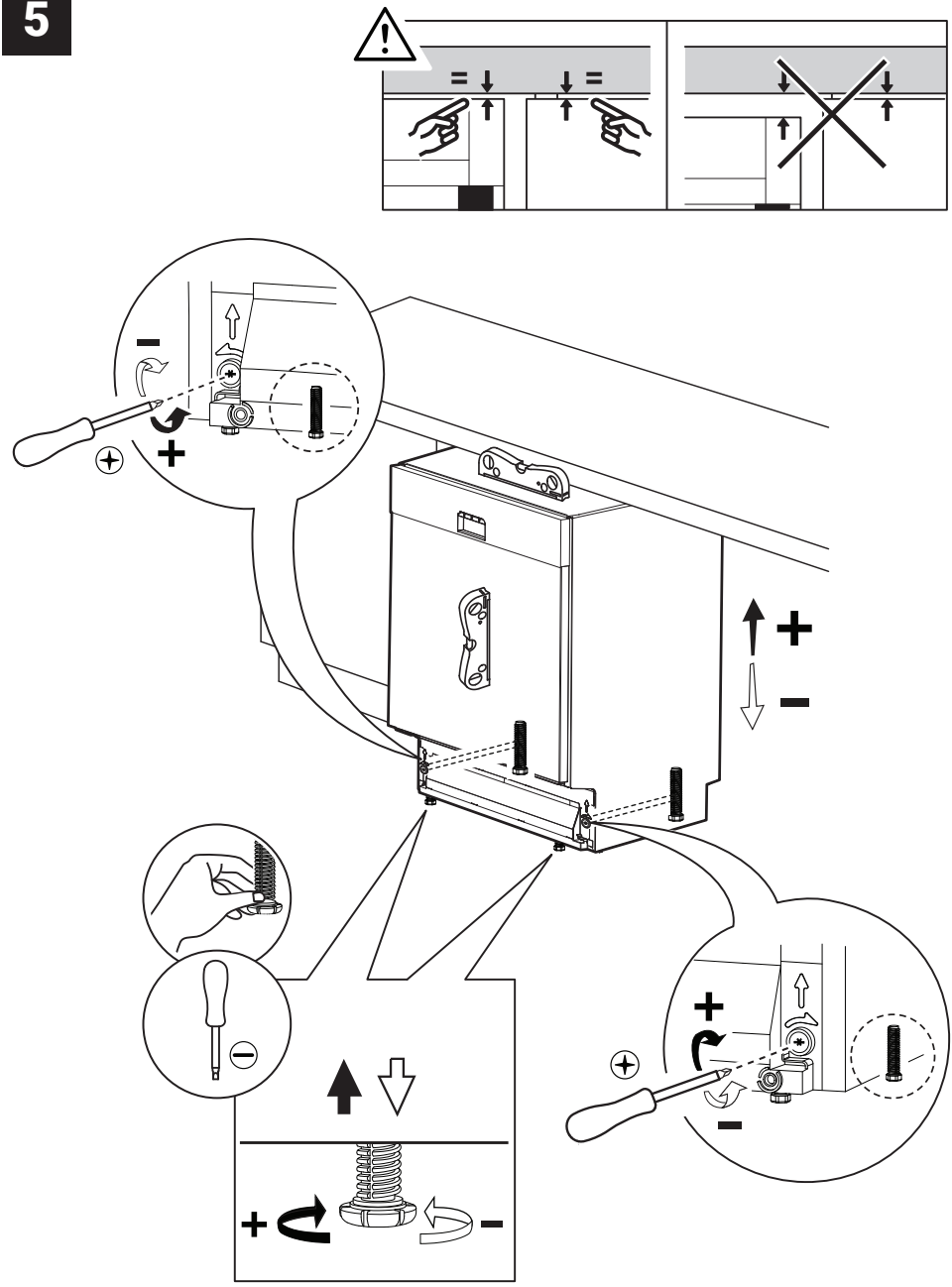

6

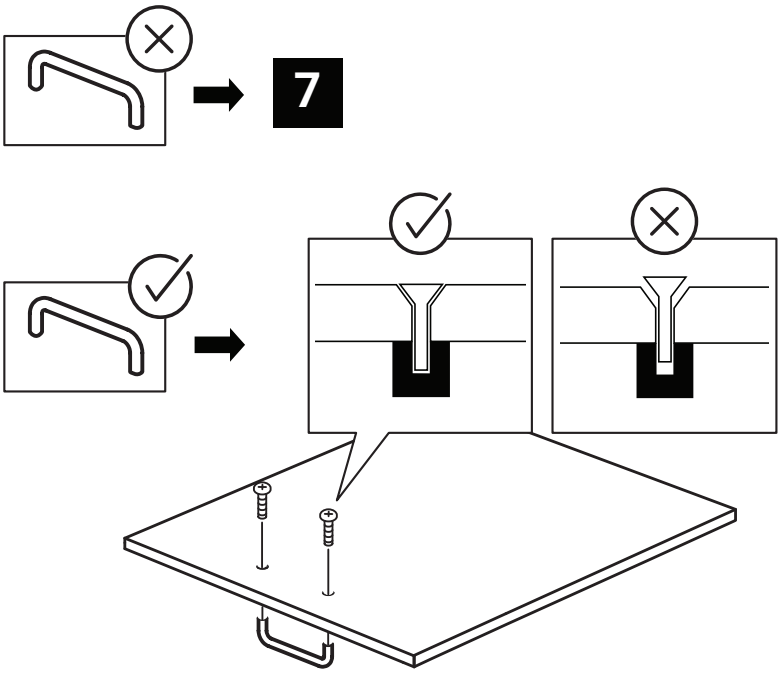

7

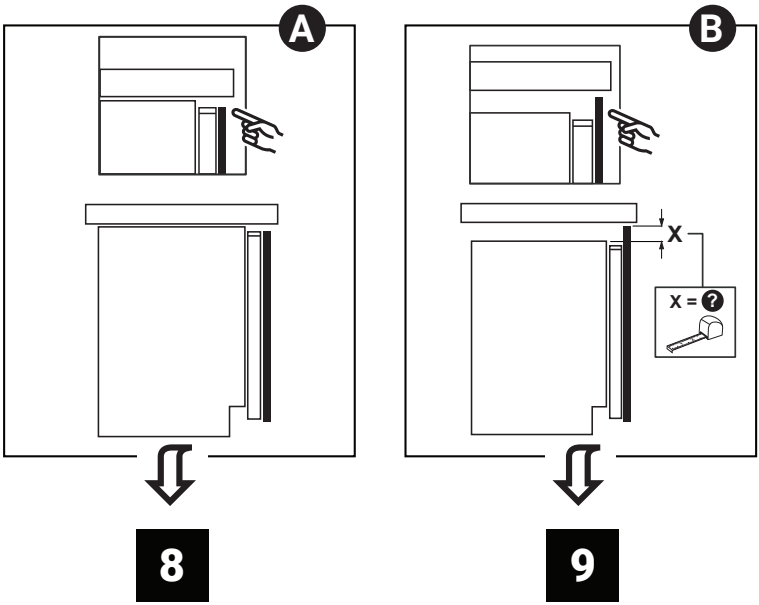

8

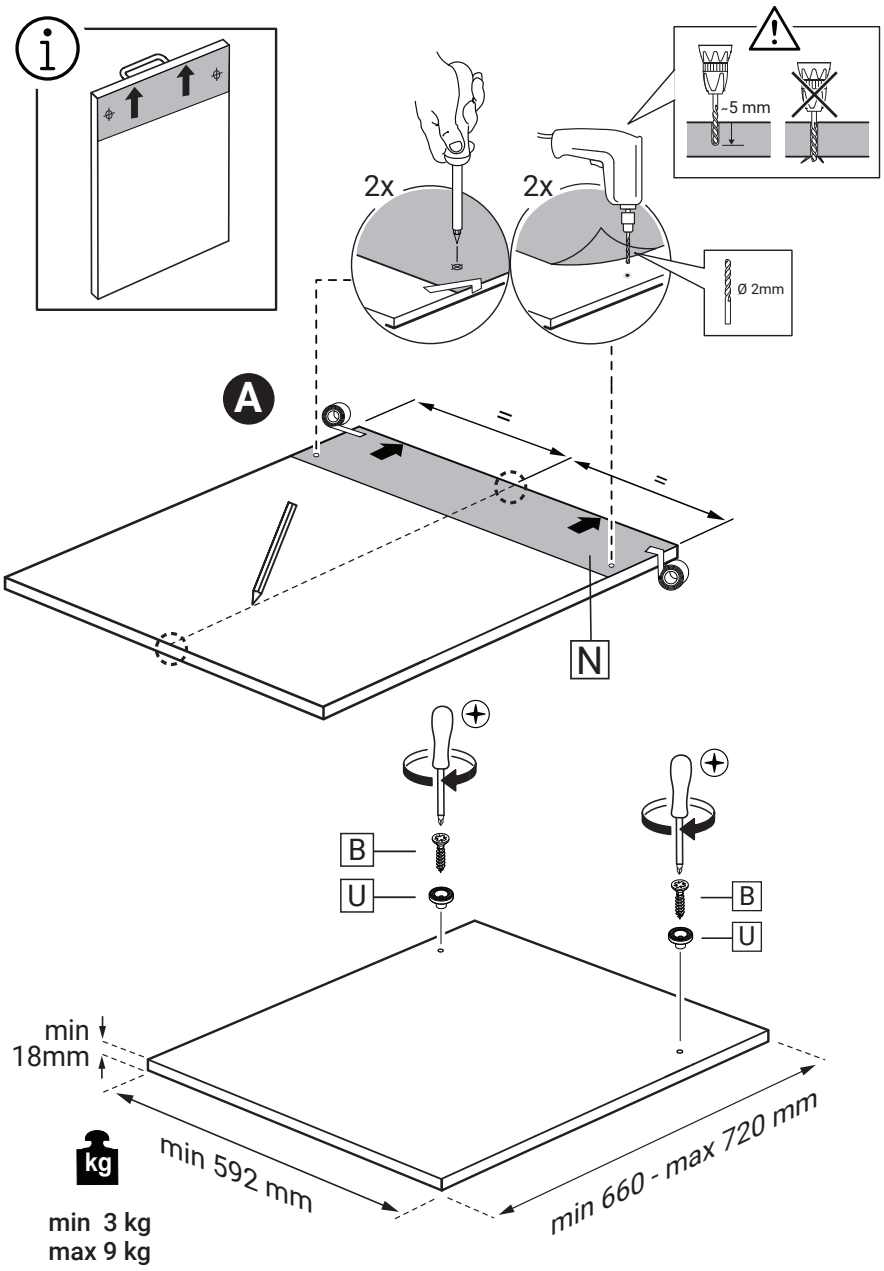
2x
2x
~5 mm
Ø 2mm
A
=
=
N
B
U
B
U
min
18mm
kg
min 592 mm
min 660 - max 720 mm
min 3 kg
max 9 kg

9

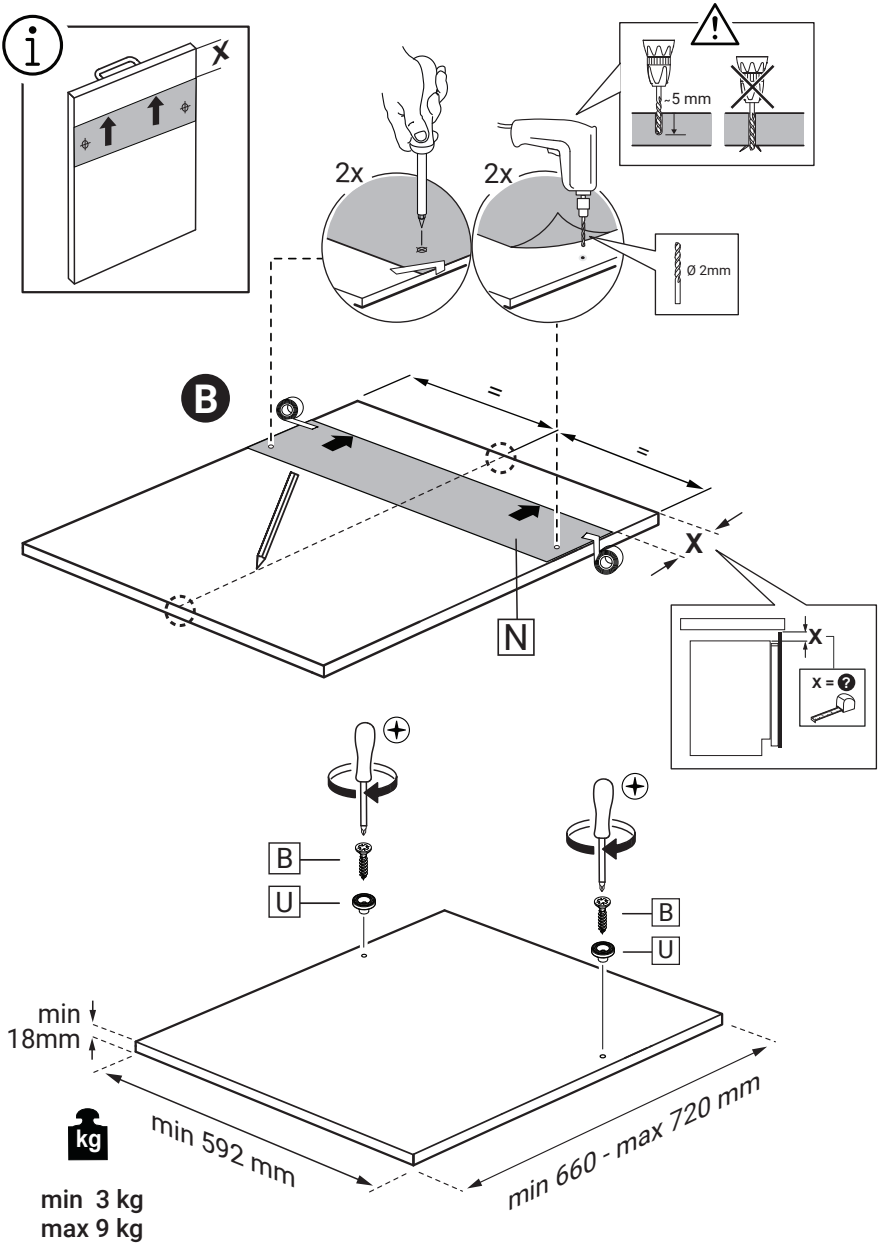
X
2x
2x
5 mm
Ø 2mm
B
=
=
X
N
X
X =
B
U
B
U
min
18mm
min 592 mm
min 660 - max 720 mm
kg
min 3 kg
max 9 kg

10

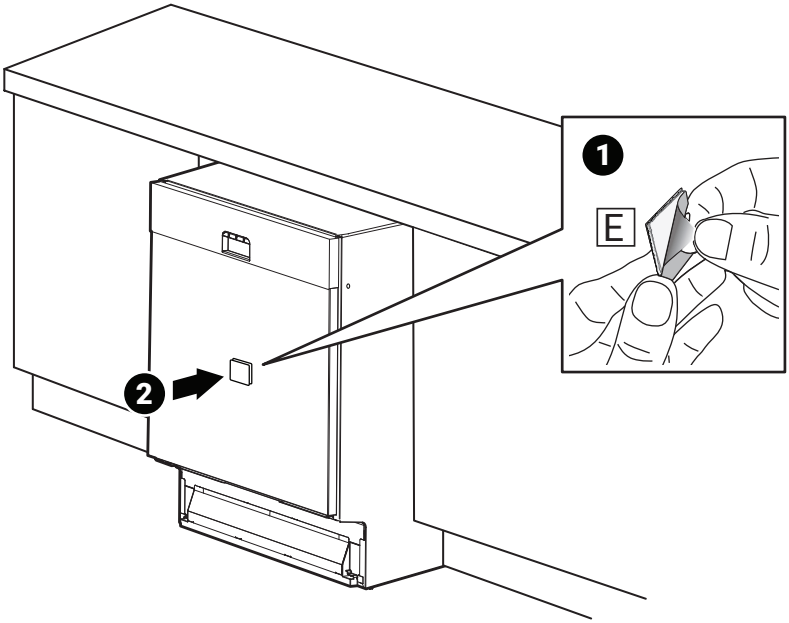

11

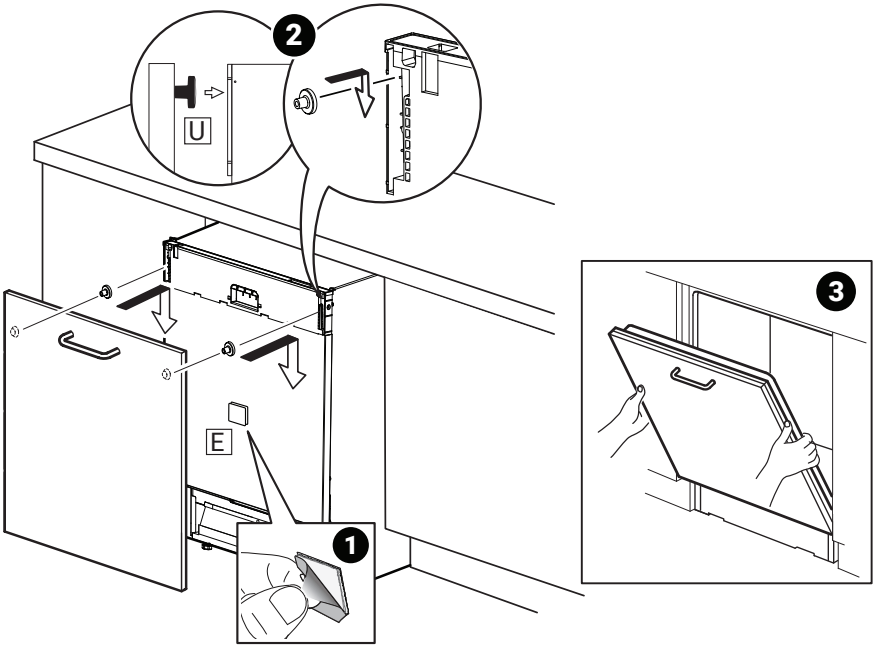

12

1-2-3-4-6

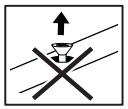

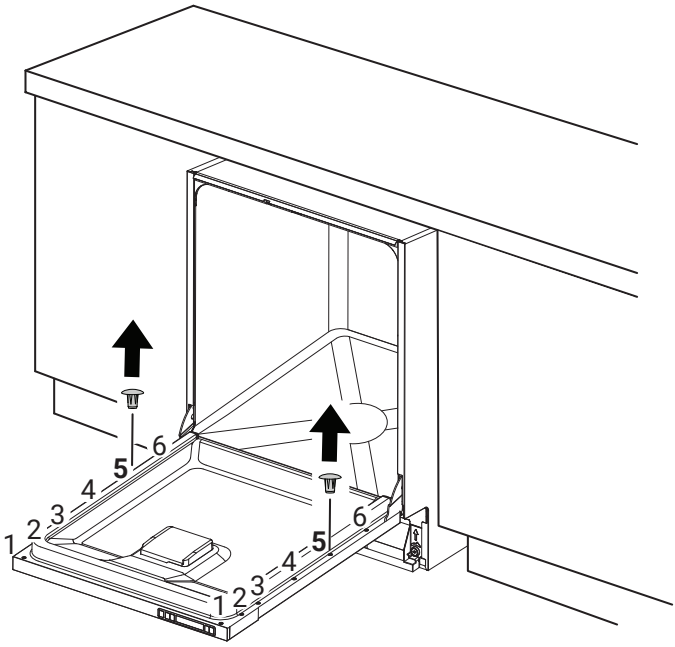

13

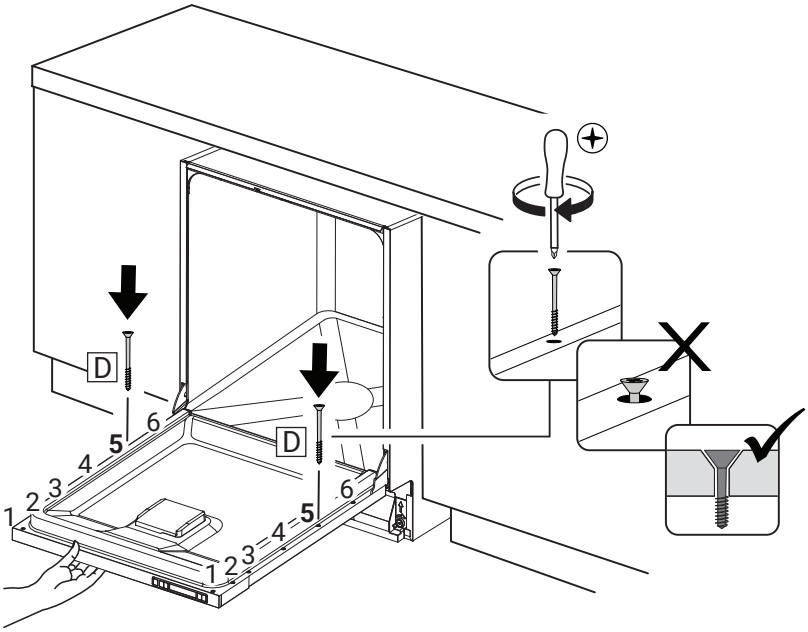

14

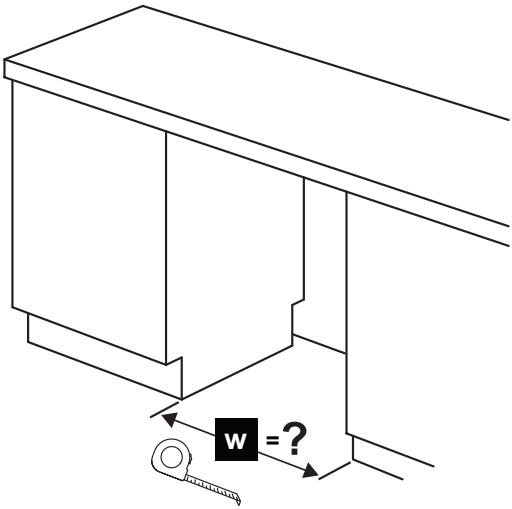
w =?

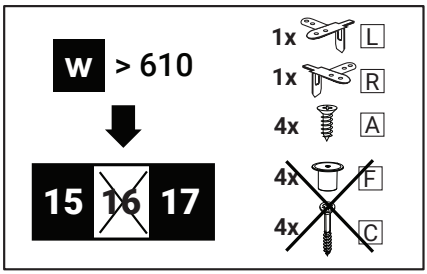
w > 610
15 16 17
1x L
1x R
4x A
4x F
4x C

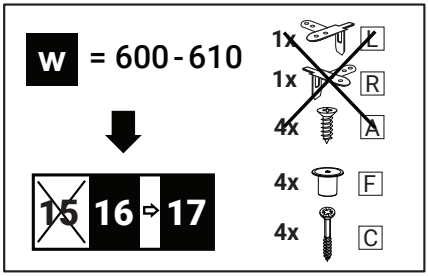
w = 600 - 610
15 16 17
1x L
1x R
4x A
4x F
4x C

15 a

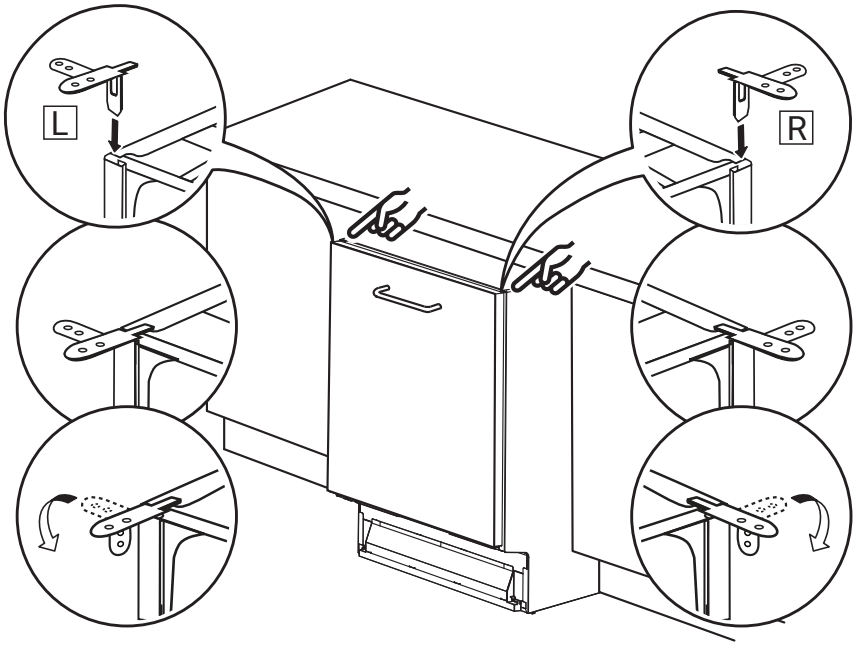
L
R

15
b

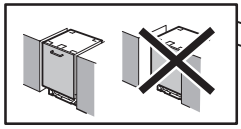

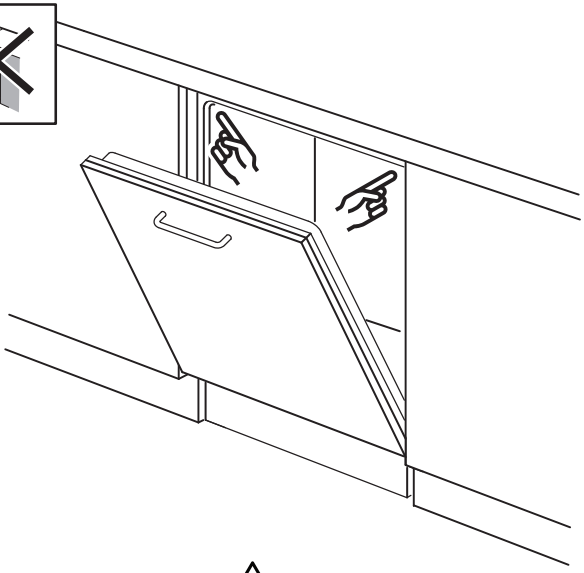

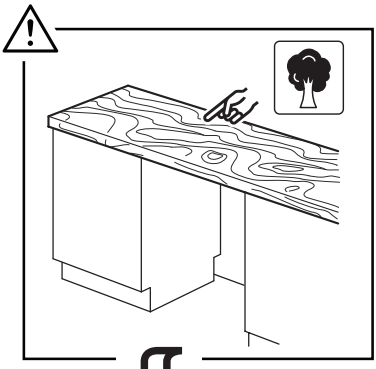

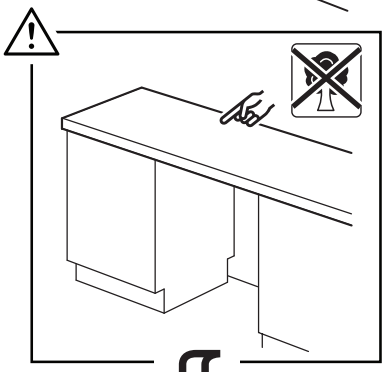

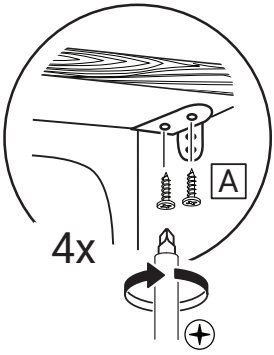

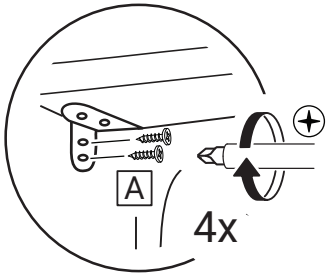

16 a

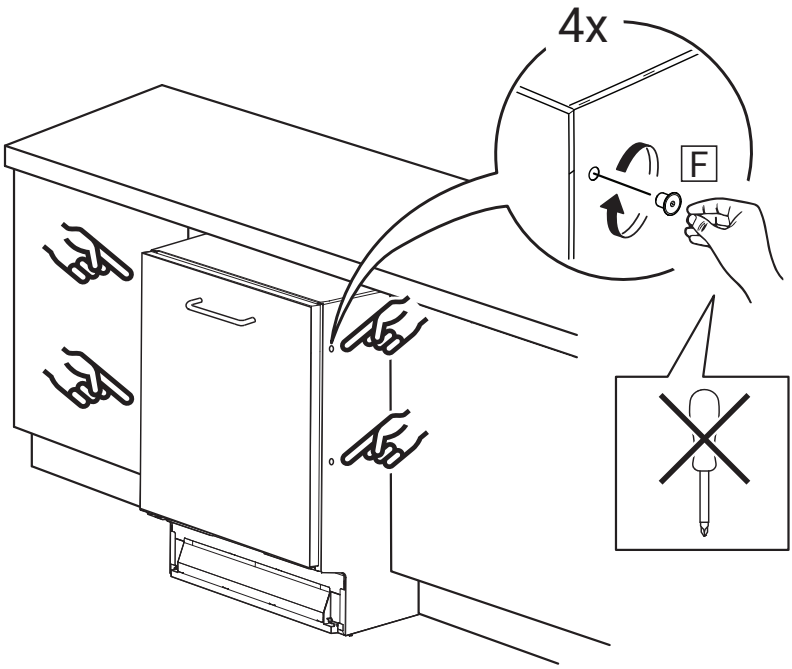

16 b

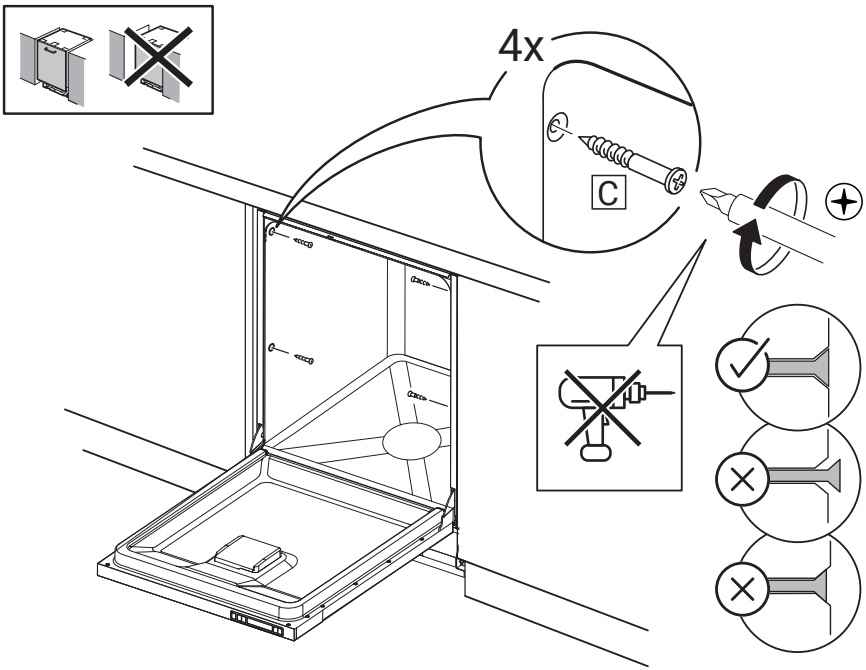

17

